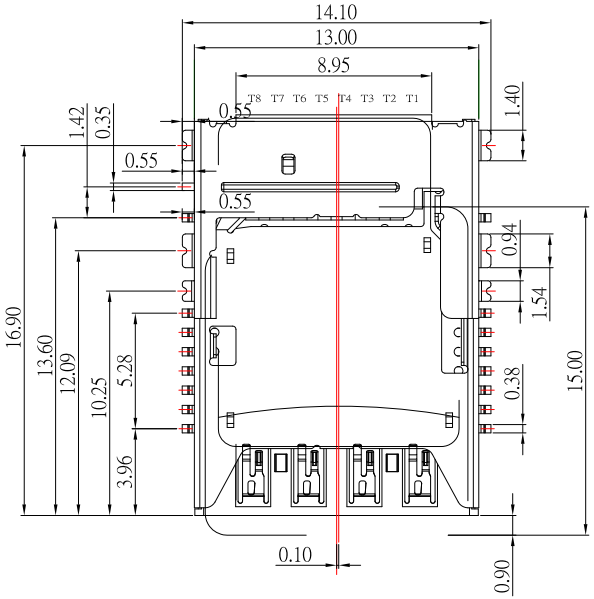

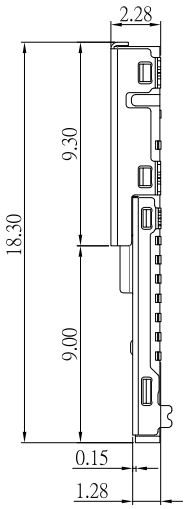

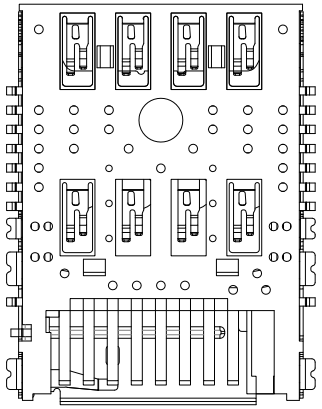

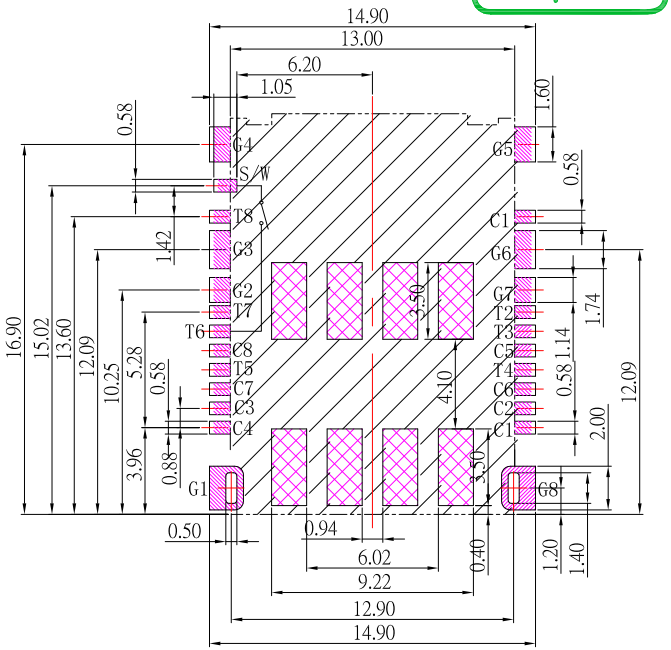

PCB LAYOYT

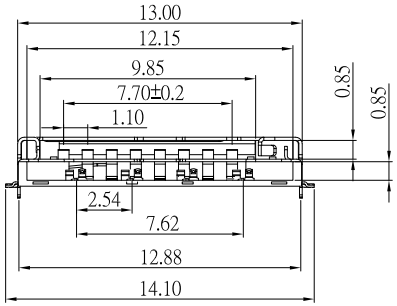

TF CARD PIN ASSIGNMENT

PIN NO.	PIN ASSIGNMENT
T1	DAT2
T2	CD/DAT3 [2]
T3	CMD
T4	VDD
T5	CLK
T6	VSS
T7	DAT0
T8	DAT1

SIM pin assignment	
	Name
C1	VCC
C2	RST
C3	CLK
C4	Reserved
C5	GND
C6	VPP
C7	I/O
C8	Reserved

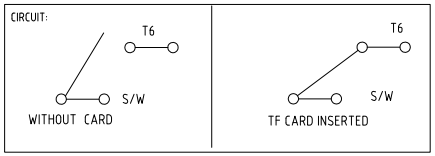

SPECIFICATION

Electrical :

1.Current Rating: 0.5A , AC/DC

2.Contact Resistance: 100 mΩ Max.

3.Insulation Resistance: 500 MΩ Min.

Environmental:

1.Operating Temperature: -20˚C ~ +85˚C.

Material:

1.Housing: LCP

2.Contact: Copper Alloy

3.Shell: Stainless Steel

Finish:

1.Contact: Plated Gold in Mating Area ;
Tin Plated on Solder Balls ;
Nickel under plated overall

2.Shell: Nickel under Plated surface layer

ITEM NO.	DESCRIPTION	DRAWN	DATE
1	更新圖面	Jack	042420

東莞市高迪電子有限公司
DONG GUAN GAO DI ELECTRONICS CO., LTD

TOLERANCE UNLESS OTHERWISE STATED : Up to 5 ±0.2; Above 5 ~ 15 ±0.3; Above 15 ~ 30 ±0.4; Above 30 ~ 50 ±0.5; Angle ±0.3˚

3RD. ANGEL'S

UNITS MM

DRAWN BY: Jack Lu	DATE 04/24/20	MAT'L	
CHECKED BY: Jacky Chen	DATE 04/24/20	FINISH	
APPROVED BY: Tony Kao	DATE 04/24/20	SCALE 1 : 1	SHEET NO. 1 of 1

TITLE	CONNECTOR		
MODLE	MICRO SD + MICRO SIM 卡座二合一		
DWG NO.	MSISD-003-S267	SIZE	A4
PART NO.	MSISD-003-S267	VER	R1